| REVISION HISTORY | | | |
|---|---|---|---|
| Rev | DESCRIPTION | DATE | APPROVED |
| | | | |
| | | | |
| | | | |

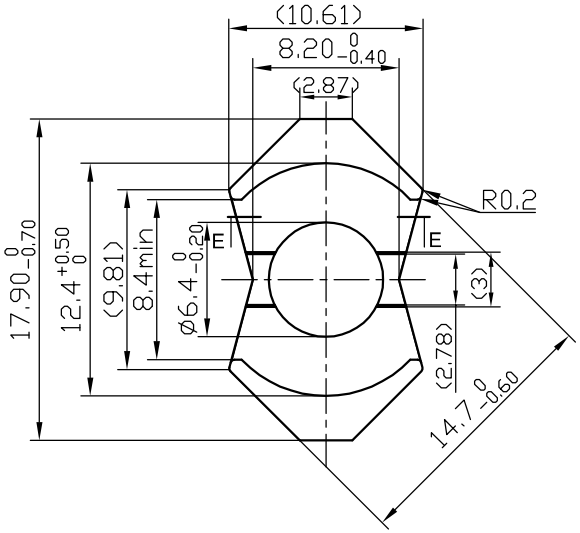


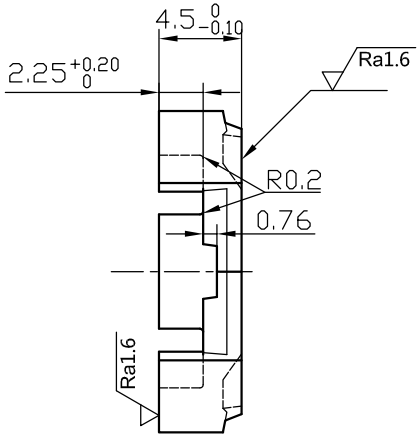


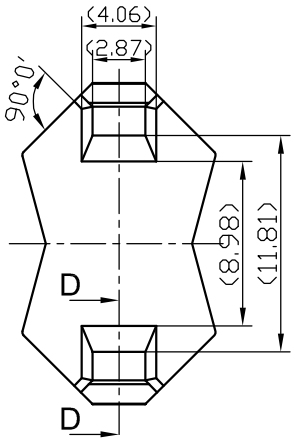


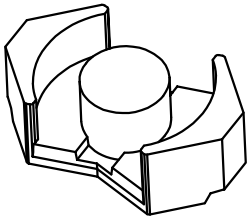

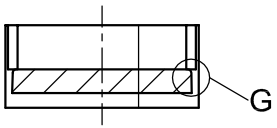


Section E-E

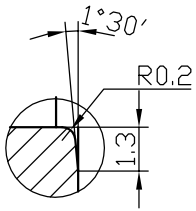


Detail G

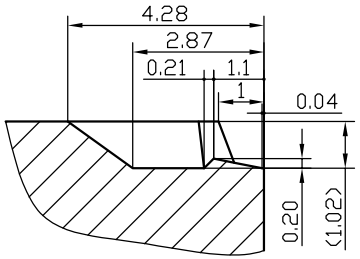


Section D-D

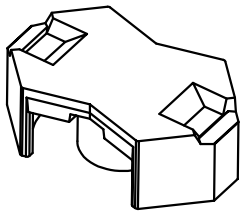

| | | | | |
|---|---|---|---|---|
| | Scale 2.5 : 1 | Material | Customer Part number | |
| Unit: mm | Standard tolerances ±0.1 | | Product Name RM-6S-9 | |
| Approved by Y.Higuchi | Created by H.Huang | Document type Production drawing | Rev 00 | Drawing No. PY170707M11 |
| Hitachi Metals (Hong kong) Ltd. Panyu Factory | | | Date of issue JUL 07 2017 | Sheet 1/1 |